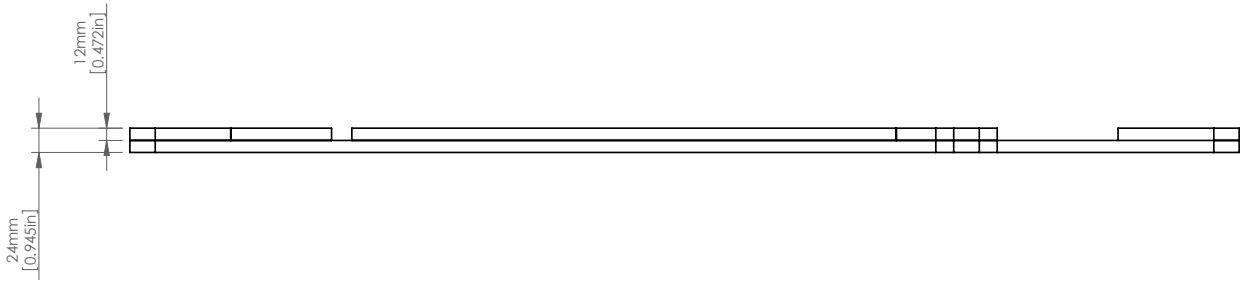

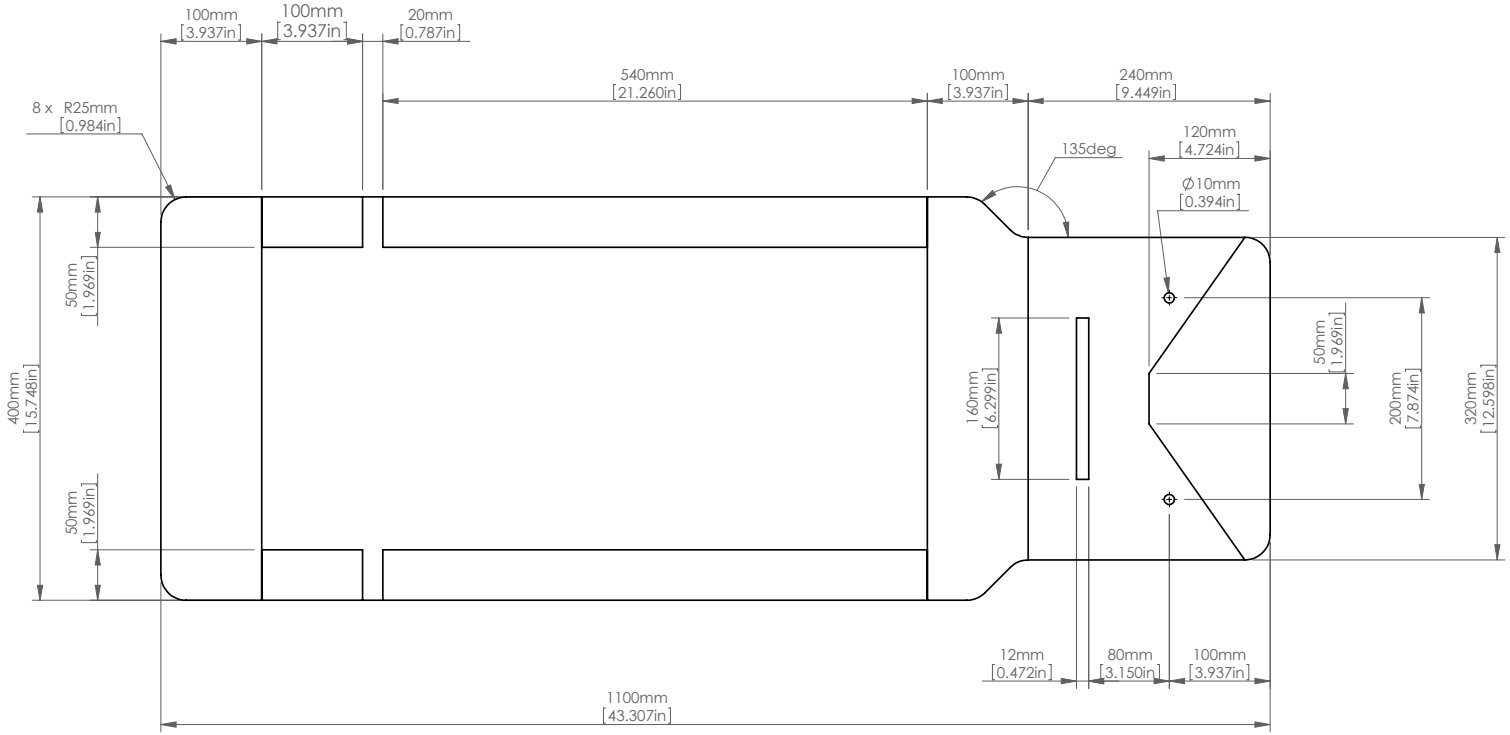

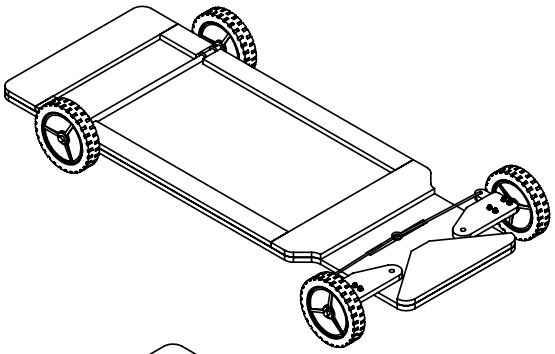

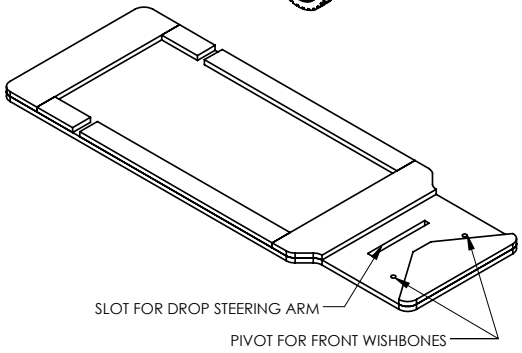

Nails and Wood Glue is used to secure all the pieces of Plywood together. If the nails protrude/stick through, bend the nails back over flat (clinch). This makes for a strong connection. You can use wood screws and glue either. Nails are generally cheaper and quicker to use.

PROPRIETARY AND CONFIDENTIAL
THE INFORMATION CONTAINED IN THIS DRAWING IS THE SOLE PROPERTY OF THE DESIGNER. ANY REPRODUCTION IN PART OR AS A WHOLE WITHOUT THE WRITTEN PERMISSION OF THE DESIGNER IS PROHIBITED.

kartbuilding.net KARTBUILDING

TITLE: LOWER CHASSIS ASSEMBLY 1		
MATERIAL AS SPECIFIED	DATE: 26/10/2010	
FILE NAME: WOODEN-PUSH-CART	SIZE: A4	REV. 1
SCALE:1:20	DESIGNER: STEPHEN BURKE	SHEET 5 OF 10